SENSOR TECHNIQUES LIMITED

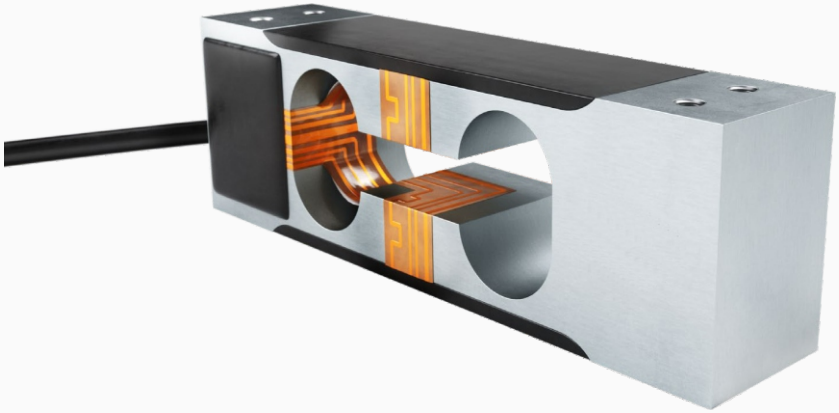

Platform Load Cell, Model PA2

- Very low capacity, compact single point load cell
- Maximum platform size 200 x 200 mm
- Available in capacity ranges from 0.3kg to 5kg
- Ideal for medical and pharmaceutical industries
- Sealed to IP66 with special humidity resistant coating
- Robust aluminium construction
- 4 core cable with a PVC outer 0.5 metres long

Technical Data

Model PA2

Accuracy Class		G3	
Minimum Utilisation	% Rated Cap.		
Y = Emax/Vmin		5000	
Total Error	% Rated Load	± 0.0200	
Zero Return after 30 mins	% Appl. Load	± 0.0166	
Temperature Effect on : Span	%Appl. Ld./10C	± 0.0100	
Zero	%ORL/10°C	± 0.0280	
Zero Balance	mV/V	± 0.1	
Input Impedance	Ohm	403 ± 20	
Output Impedance	Ohm	330 ± 25	
Recommended Supply Voltage	V	5 (Max 15)	
Compensated Temp. Range	°C	-10 to +40	
Operating Temperature Range	°C	-20 to +65	
Deflection	mm	< 0.4	
Safe Overload	% Rated Cap.	150	
Ultimate Overload	% Rated Cap.	300	
Cable Length	m	0.5	
Typical Platform Size	mm	200 x 200	
Environmental Protection		IP66	
Output at Rated Load (ORL)	mV/V	1	2
Output at Rated Load Tolerance	% mV/V	± 10	± 10
Rated Capacities (Emax)	kg	0.3, 0.5	1, 2, 3, 5

Dimensions

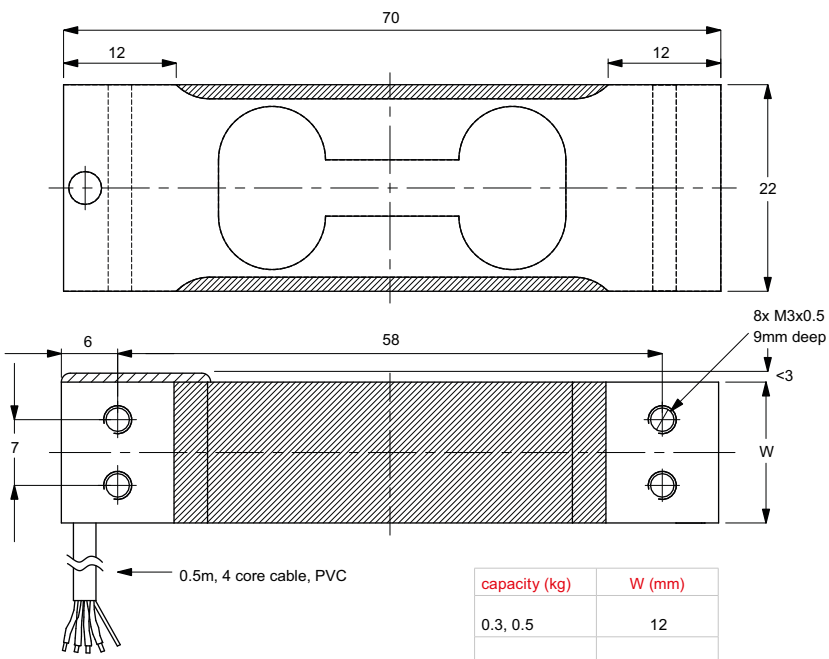

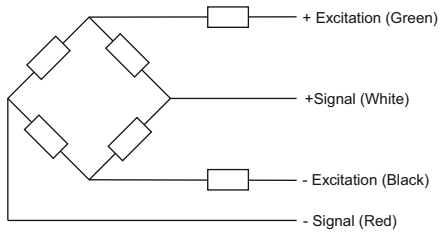

capacity (kg)	W (mm)
0.3, 0.5	12
1, 2, 3, 5	15

All Dimensions in mm
Specifications are subject to change without prior notice

DS-PA2-1, 06/22

SENSOR TECHNIQUES LIMITED
Tel. +44 (0)1446 771185 Fax +44 (0)1446 771186

Precision Load cells
Accessories and Mountings
Measuring Instruments and Systems