SENSOR TECHNIQUES LIMITED

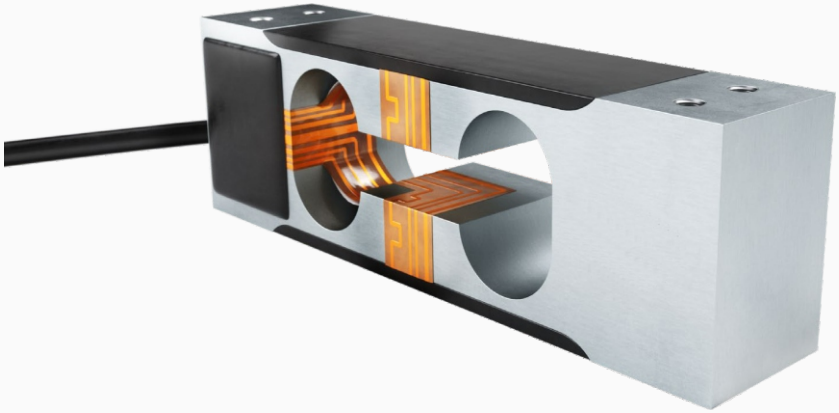

Platform Load Cell, Model PA2

- Very low capacity, compact single point load cell
- Maximum platform size 200 x 200 mm
- Available in capacity ranges from 1kg to 5kg
- Ideal for medical and pharmaceutical industries
- Sealed to IP66 with special humidity resistant coating
- Robust aluminium construction
- 4 core cable with a PVC outer 0.5 metres long

Technical Data

Model PA2

Accuracy Class		G3
Minimum Utilisation	% Rated Cap.	
Y = Emax/Vmin		5000
Total Error	% Rated Load	± 0.0200
Zero Return after 30 mins	% Appl. Load	± 0.0166
Temperature Effect on : Span	%Appl. Ld./10C	± 0.0100
Zero	%ORL/10°C	± 0.0280
Zero Balance	mV/V	± 0.1
Input Impedance	Ohm	403 ± 20
Output Impedance	Ohm	330 ± 25
Recommended Supply Voltage	V	5 (Max 15)
Compensated Temp. Range	°C	-10 to +40
Operating Temperature Range	°C	-20 to +65
Deflection	mm	< 0.4
Safe Overload	% Rated Cap.	150
Ultimate Overload	% Rated Cap.	300
Cable Length	m	0.5
Typical Platform Size	mm	200 x 200
Environmental Protection		IP66
Output at Rated Load (ORL)	mV/V	2
Output at Rated Load Tolerance	% mV/V	± 10
Rated Capacities (Emax)	kg	1, 2, 3, 5

Dimensions

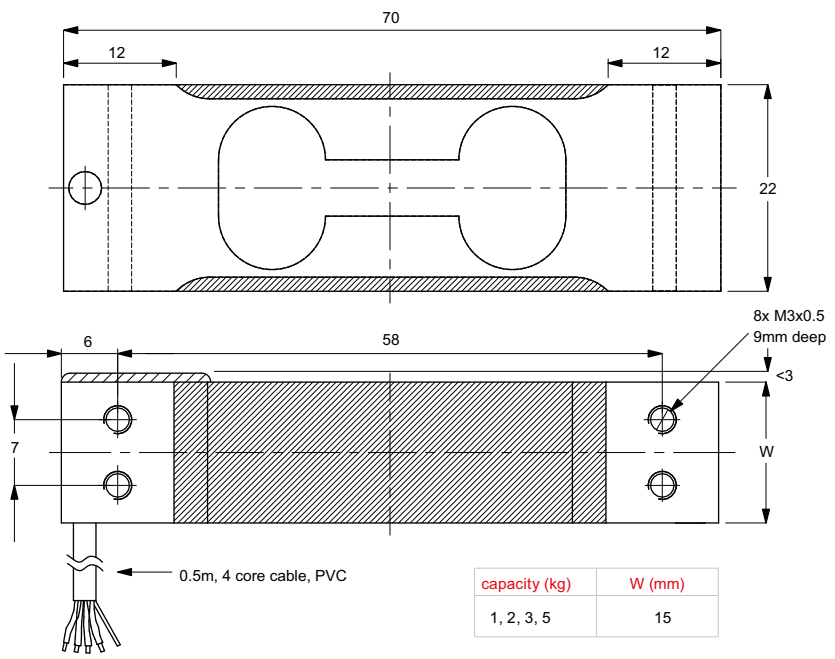

capacity (kg)	W (mm)
1, 2, 3, 5	15

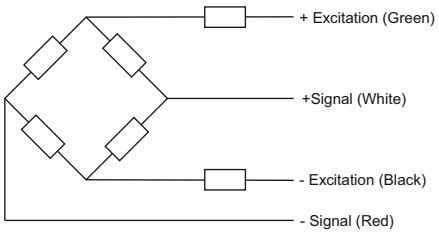

All Dimensions in mm
Specifications are subject to change without prior notice

DS-PA2-2, 08/22

SENSOR TECHNIQUES LIMITED
Tel. +44 (0)1446 771185 Fax +44 (0)1446 771186

Precision Load cells
Accessories and Mountings
Measuring Instruments and Systems